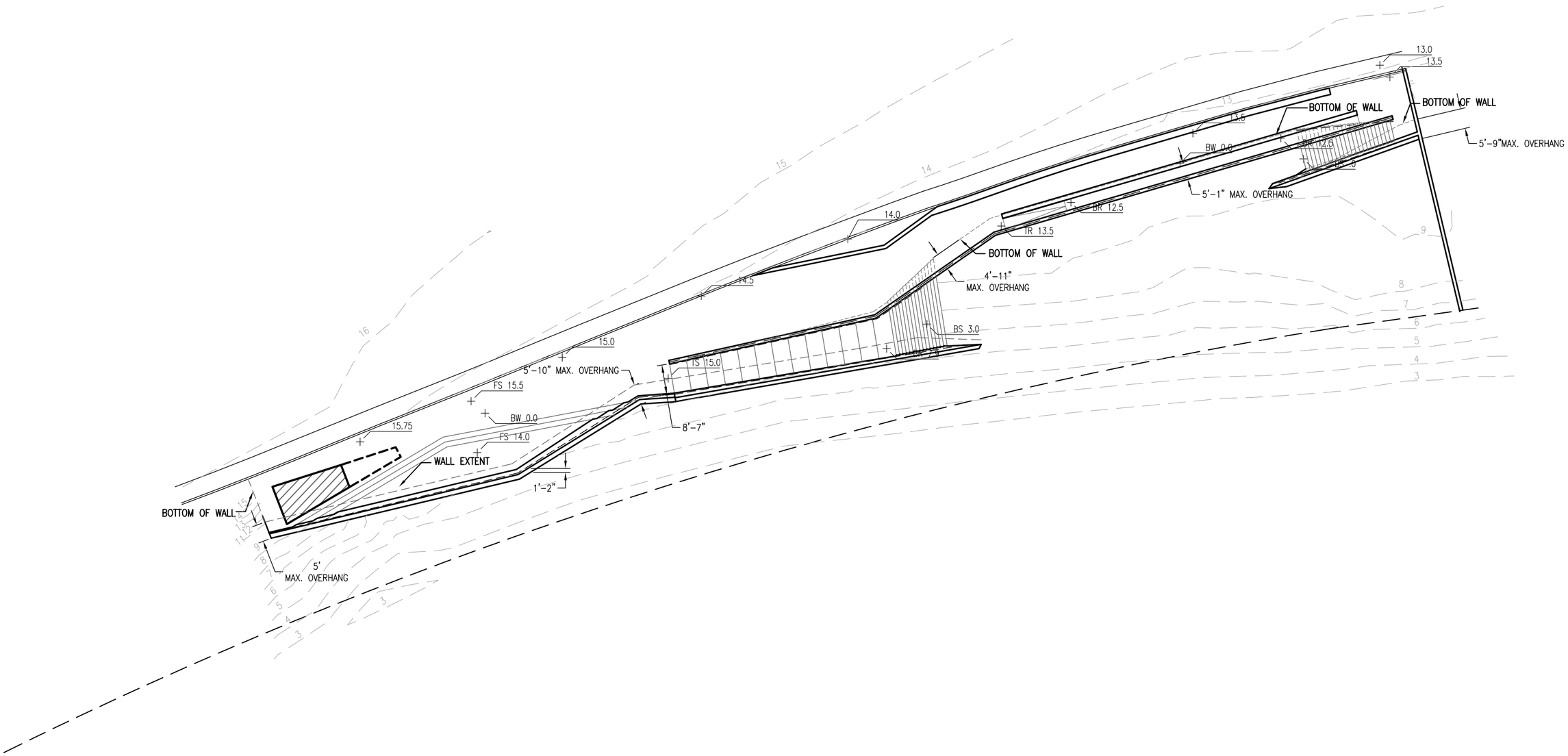

bionic

1" = 30'-0" 0 5 10 15 30FT

site plan

CARBON LA COSTA BEACH

2011 jun 21

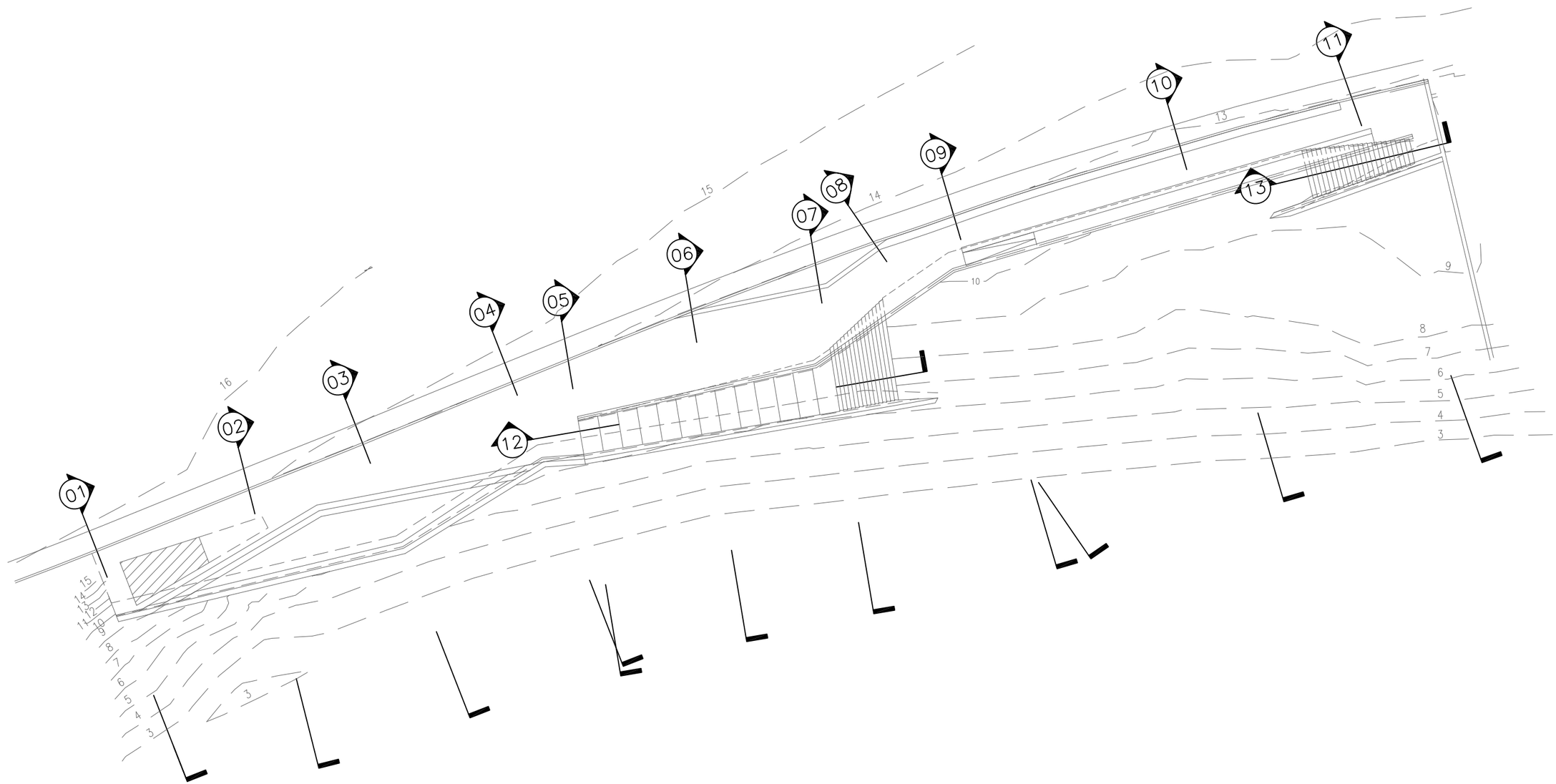

bionic

1" = 30'-0" 0 5 10 15 30FT

section locations

plan

CARBON LA COSTA BEACH

2011 jun 21

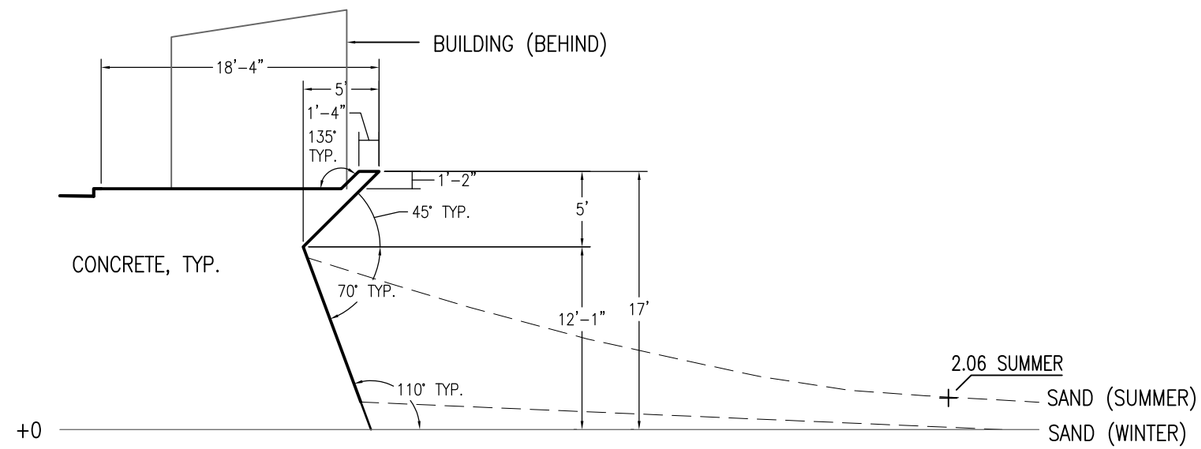

01 SECTION 01

SCALE: 1"=10'

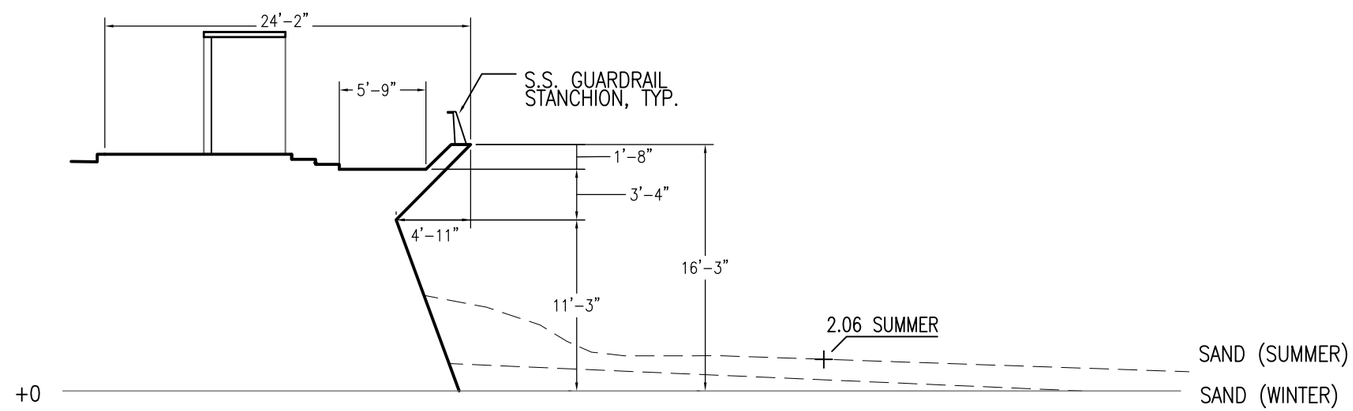

02 SECTION 02

SCALE: 1"=10'

bionic

sections 1+2

CARBON LA COSTA BEACH

2011 jun 21

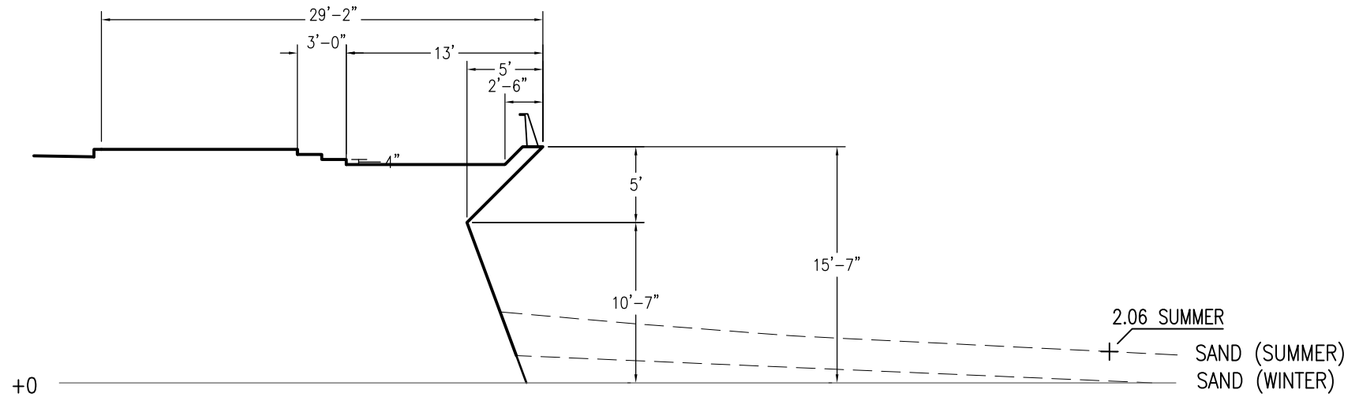

03 SECTION 03
SCALE: 1"=10'

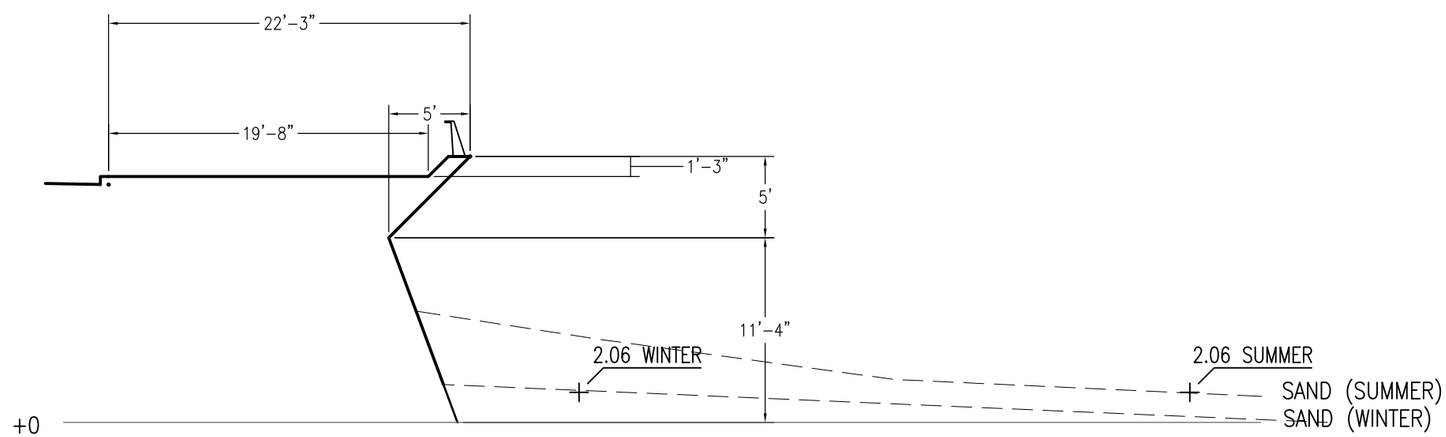

04 SECTION 04
SCALE: 1"=10'

bionic

sections 3+4
CARBON LA COSTA BEACH
2011 jun 21

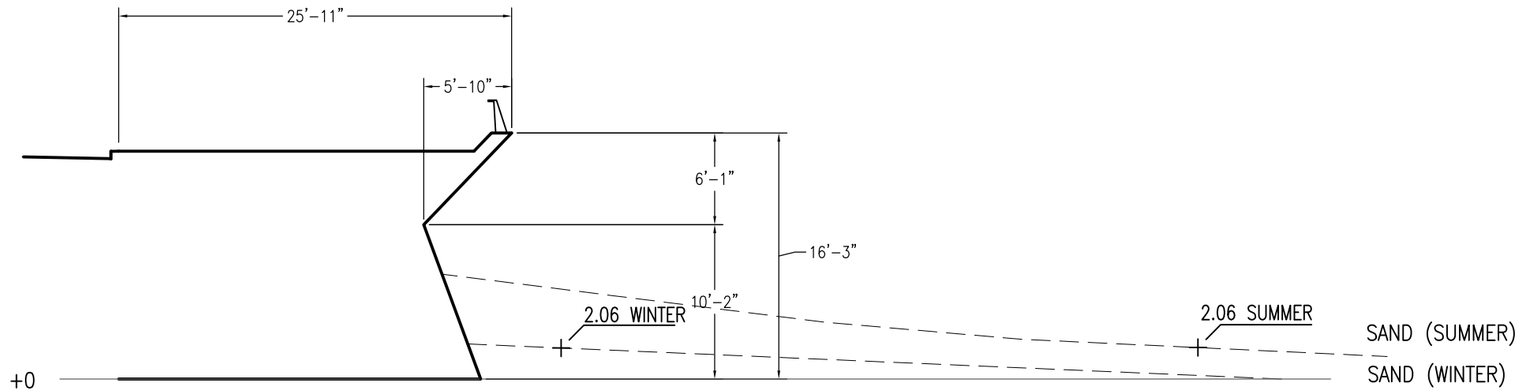

05 SECTION 05
SCALE: 1"=10'

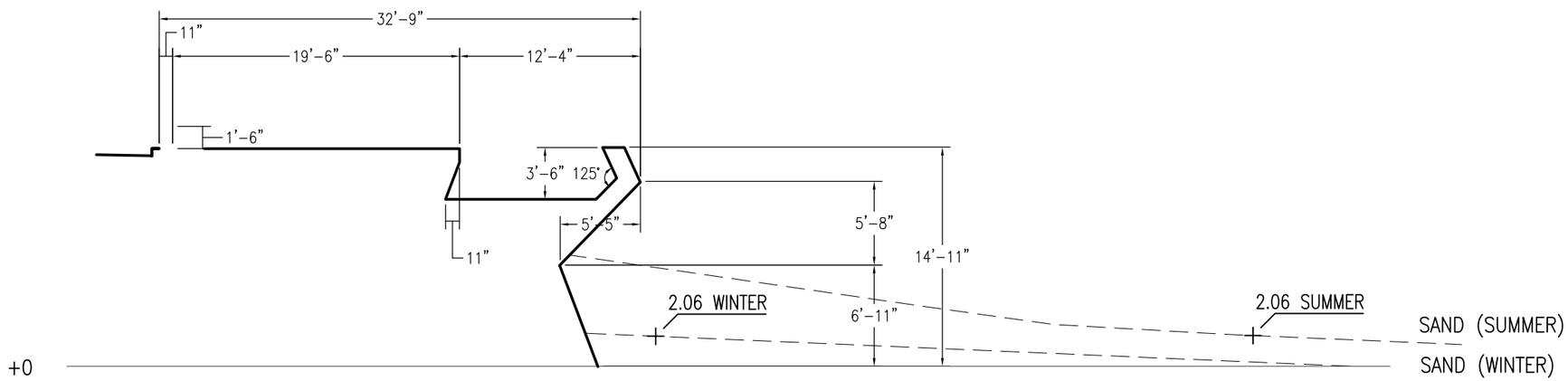

06 SECTION 06
SCALE: 1"=10'

bionic

sections 5+6
CARBON LA COSTA BEACH
2011 jun 21

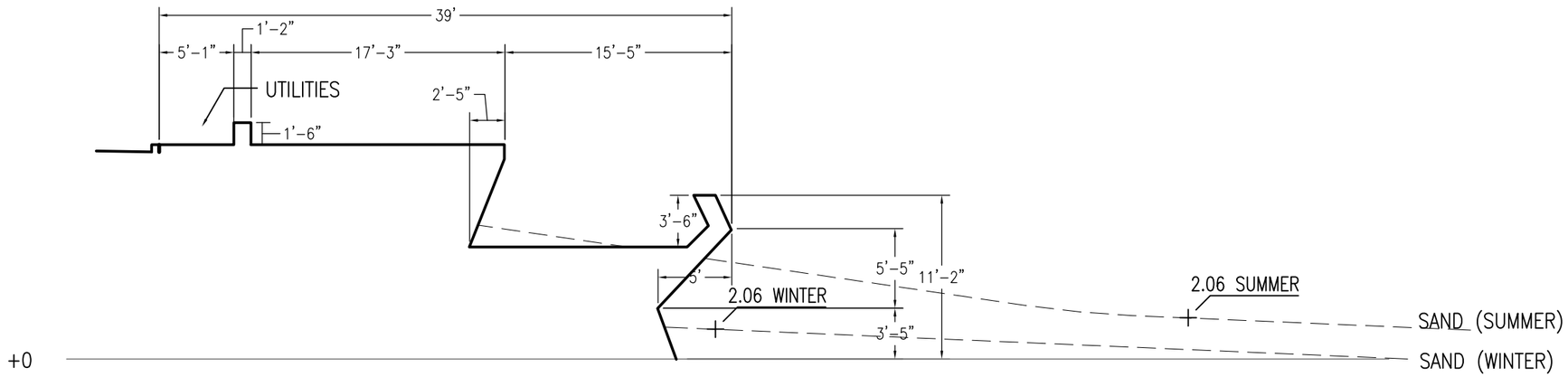

07 SECTION 07

SCALE: 1"=10'

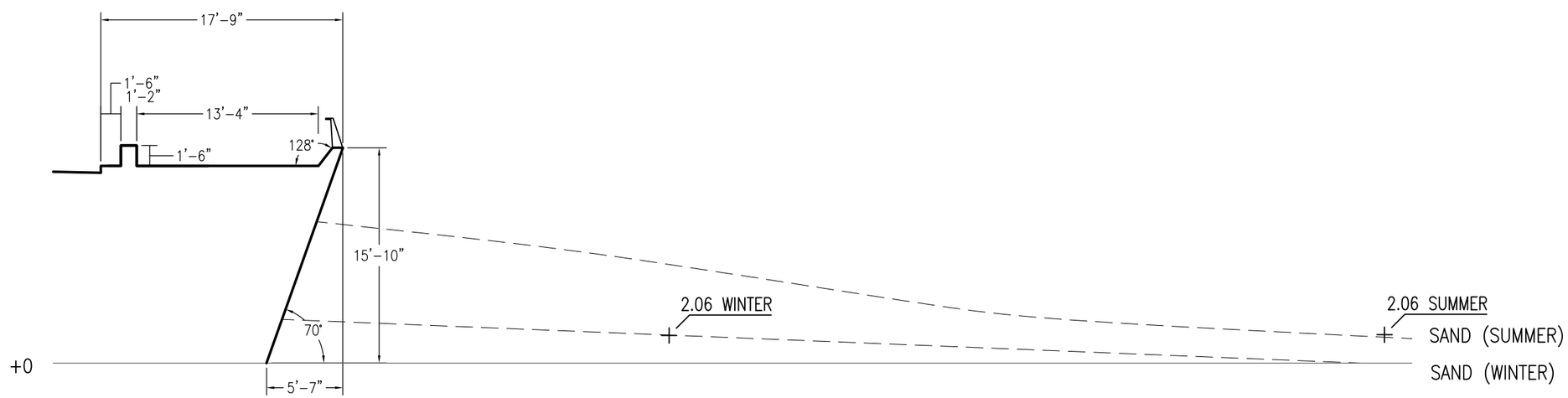

08 SECTION 08

SCALE: 1"=10'

bionic

sections 7+8

CARBON LA COSTA BEACH

2011 jun 21

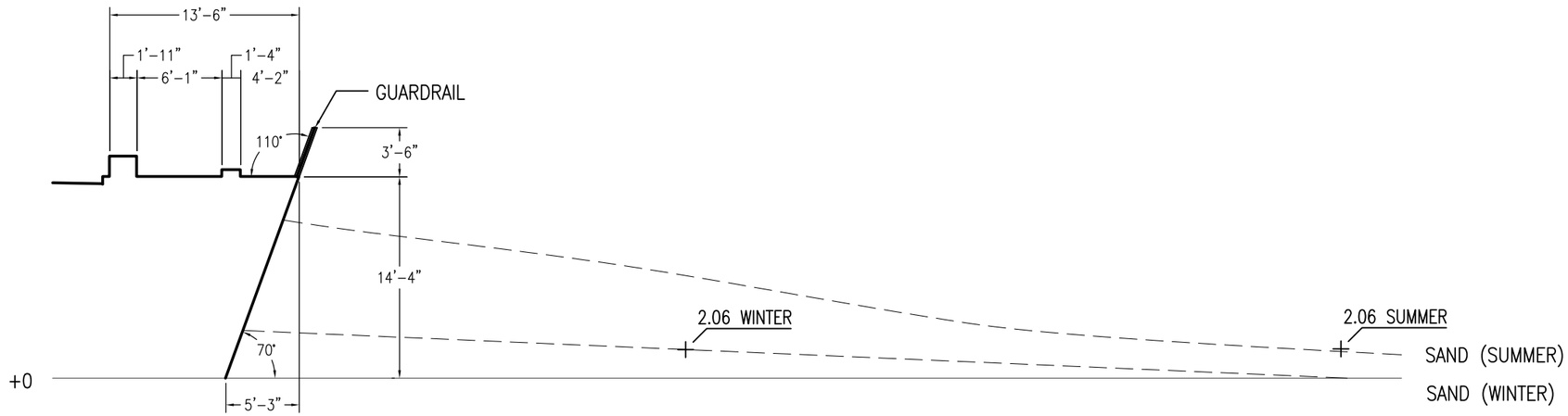

09 SECTION 09

SCALE: 1"=10'

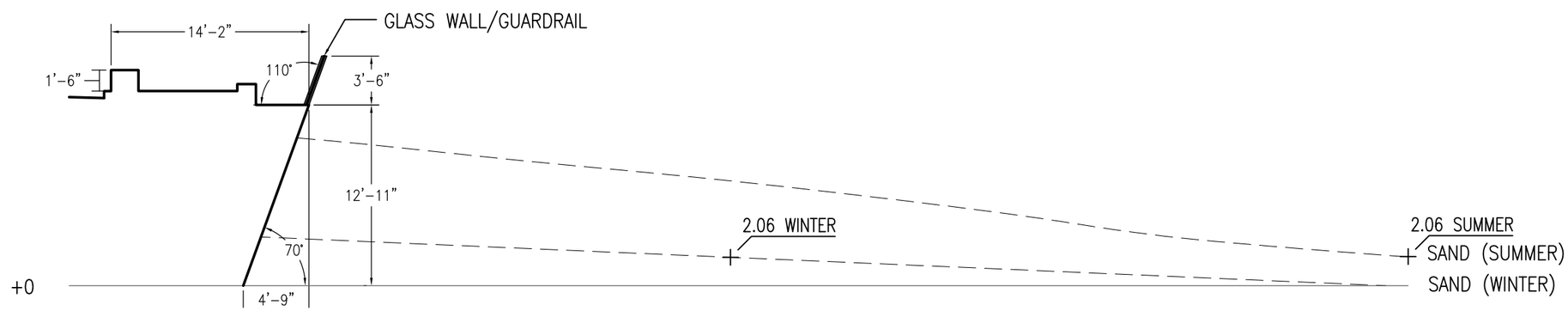

10 SECTION 10

SCALE: 1"=10'

bionic

sections 9+10

CARBON LA COSTA BEACH

2011 jun 21

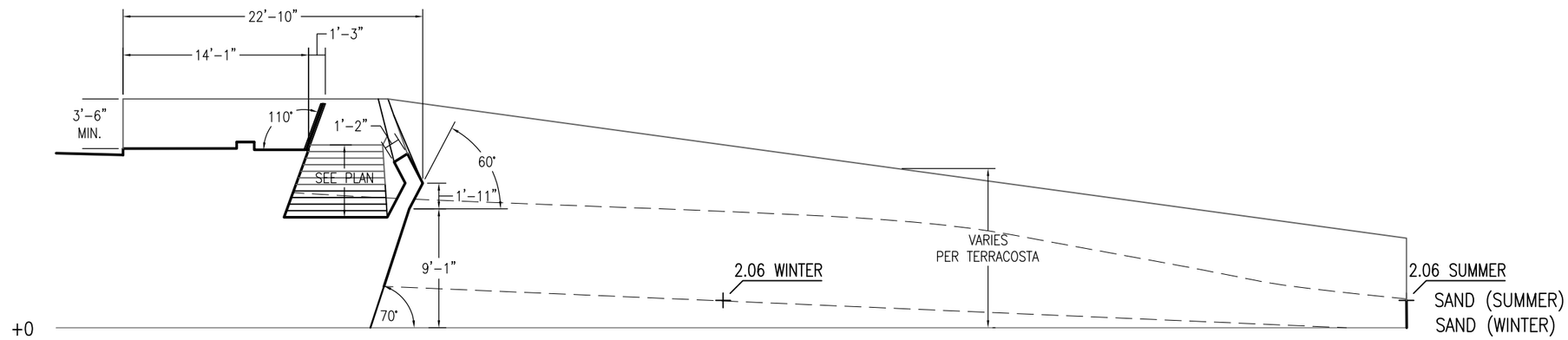

11 SECTION 11
SCALE: 1"=10'

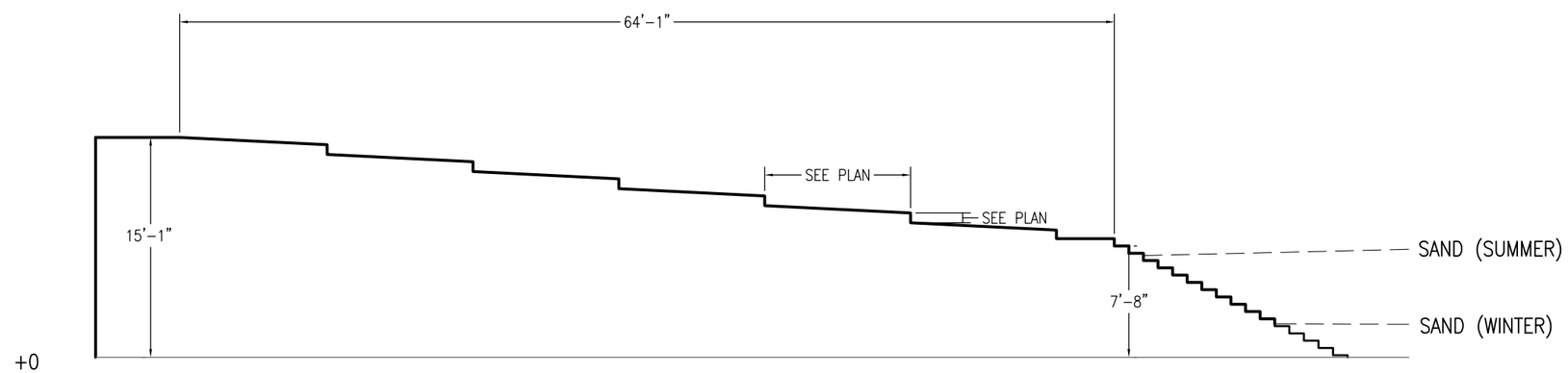

12 SECTION 12
SCALE: 1"=10'

bionic

sections 11+12
CARBON LA COSTA BEACH
2011 jun 21

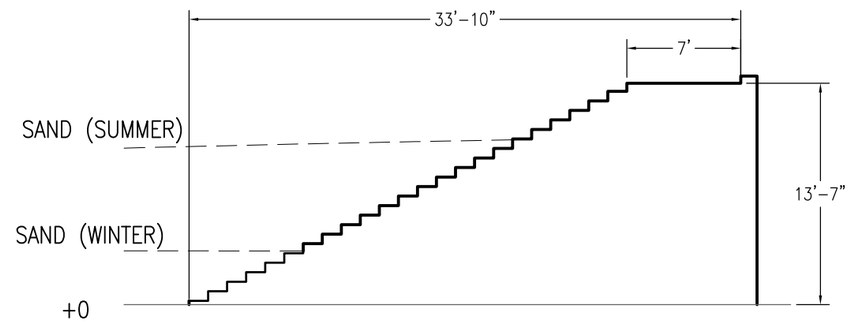

13 SECTION 13

SCALE: 1"=10'

bionic

section 13

CARBON LA COSTA BEACH

2011 jun 21