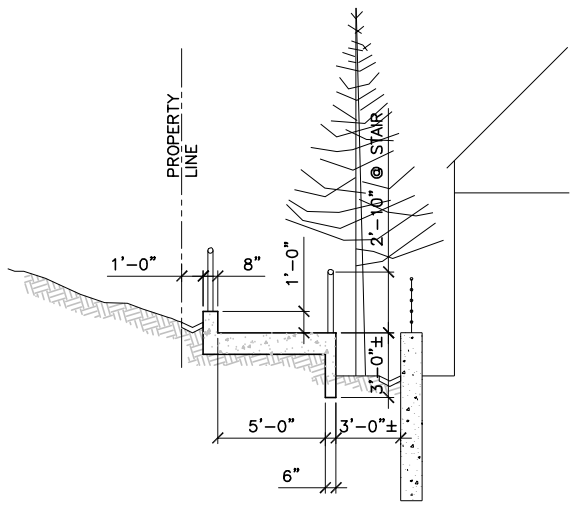

SECTION D-D

SCALE: NTS
SCALE: NTS

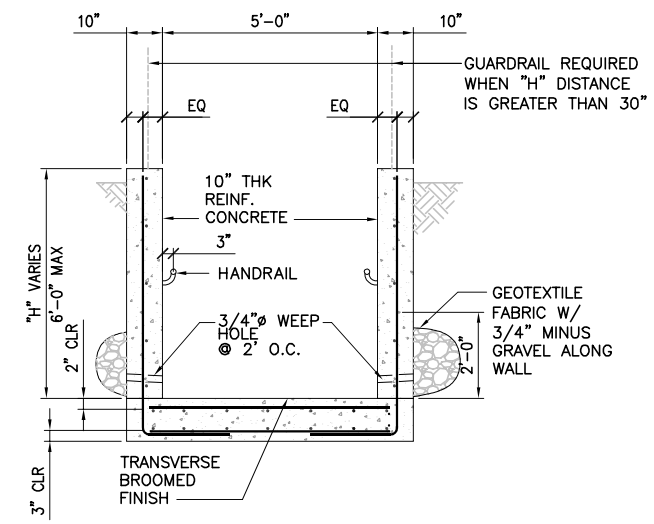

SECTION E-E

SCALE: NTS

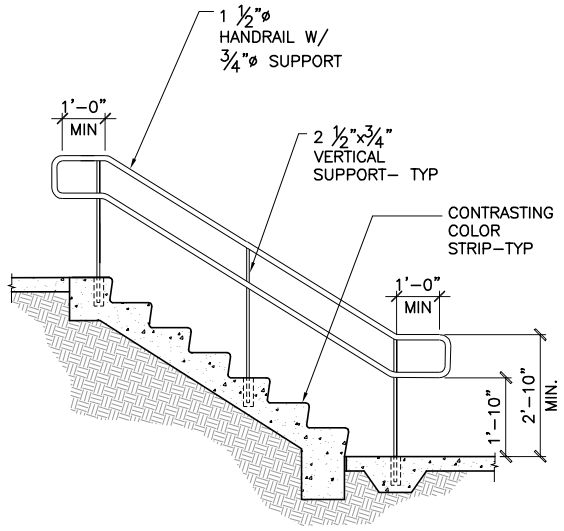

HANDRAIL DETAIL

SCALE: NTS

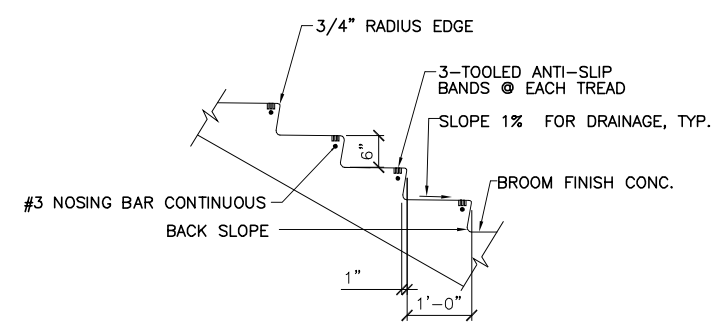

STAIR DETAIL

SCALE: NTS

SEE ADDITIONAL PLANS FOR IMPROVEMENTS IN THIS AREA ALONG EAST SEALEVEL DRIVE

JUNE 5, 2008

URS
Cash & Associates
5772 Bolsa Ave, Suite 100
Huntington Beach, CA 92649-1134
Tel: (714) 895-2072
Fax: (714) 895-1291

LOT I
STAIRS EXHIBIT

SHEET 2 OF 2

LECHUZA BEACH
MALIBU, CALIFORNIA

MOUNTAINS RECREATION AND CONSERVATION AUTHORITY
LOS ANGELES, CALIFORNIA