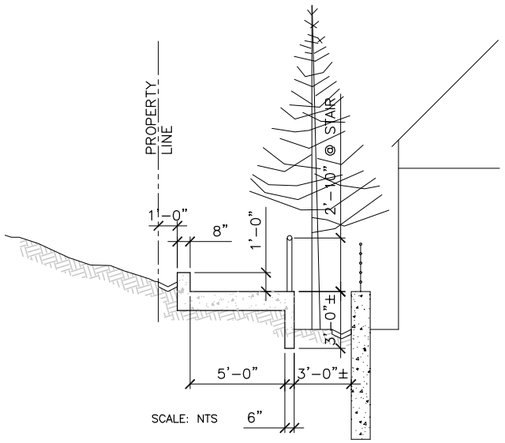

SECTION D–D

SCALE: NTS

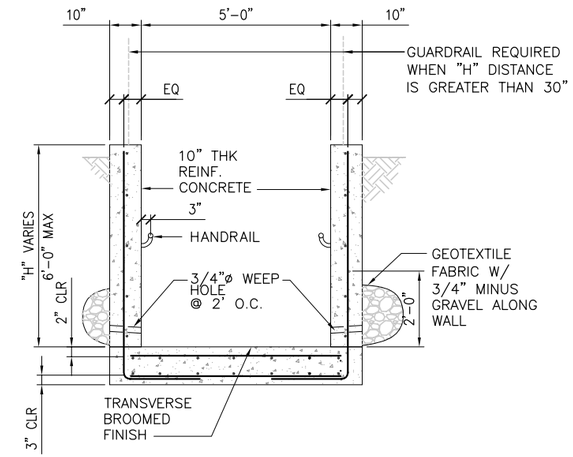

SECTION E–E

SCALE: NTS

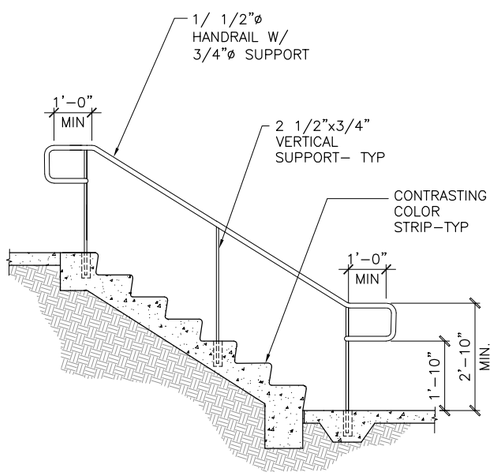

HANDRAIL DETAIL

SCALE: NTS

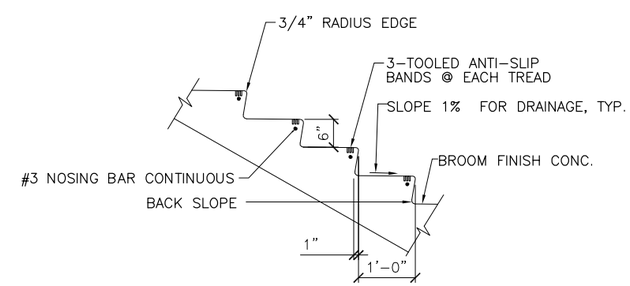

STAIR DETAIL

SCALE: NTS

LOT 1
STAIRS EXHIBIT
SHEET 2 OF 2