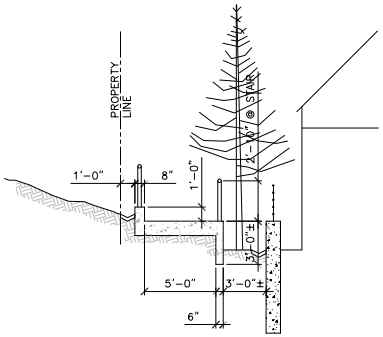

SECTION D—D
SCALE: NTS
SCALE: NTS

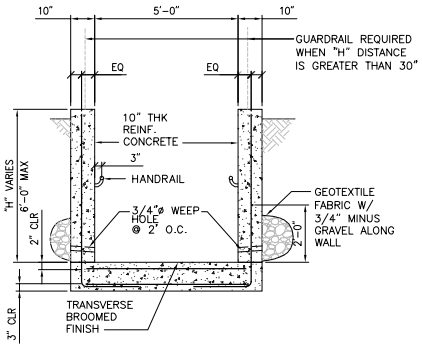

SECTION E—E
SCALE: NTS

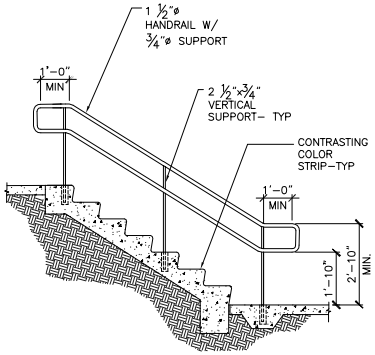

HANDRAIL DETAIL
SCALE: NTS

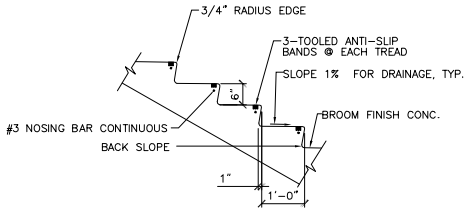

STAIR DETAIL
SCALE: NTS

JULY 2007

URS
Cash & Associates
5772 Bolsa Ave, Suite 100
Huntington Beach, CA 92649-1134
Tel: (714) 895-2072
Fax: (714) 895-1291

LOT I
STAIRS EXHIBIT

SHEET 2 OF 2

LECHUZA BEACH
MALIBU, CALIFORNIA

MOUNTAINS RECREATION AND CONSERVATION AUTHORITY
LOS ANGELES, CALIFORNIA