Exhibit 4: Preliminary Access Facility Designs and Pier Example

PALMETTO ESPLANADE PUBLIC ACCESS

400 PALMETTO BLOCK
PACIFICA, CALIFORNIA

GENERAL NOTES

NOTES

NO.	REVISION / ISSUE	DATE

511 First Street
Benicia, CA 94553

707.746.1948 phone
707.746.7269 fax

www.landpeople.net

landscape architects & planners

PROJECT	SHEET
ESPLANADE PUBLIC ACCESS	1
DATE: APRIL 13, 2007	OF 5 SHEETS
SCALE: 1"= 50'	

Exhibit 4: Preliminary Access Facility Designs and Pier Example

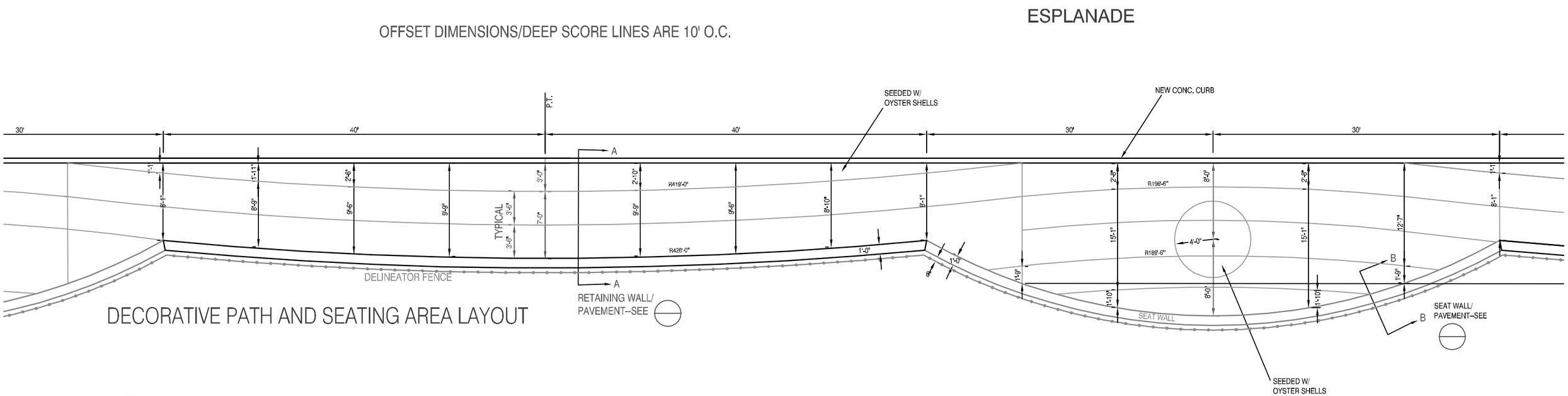

DECORATIVE PATH AND SEATING AREA LAYOUT

NOTES:

1. DOWELS: ½" smooth bar dowels, 18" long at 24" O.C. at expansion joints and cold joints, to be greased or sleeved on one end.
2. Expansion Joints: ¼" expansion material shall be placed at driveways and at 100' intervals.
3. WEAKENED PLANE JOINTS: Plastic pulltop quickjoint strips or approved equal shall be at 20' O.C. and 1½" deep.
4. score marks: Sidewalk shall be scored at least ¼" deep.
5. at coldjoints between sidewalk and curb: #3x6" dowels shall be drilled in back of curb at 24" O.C.

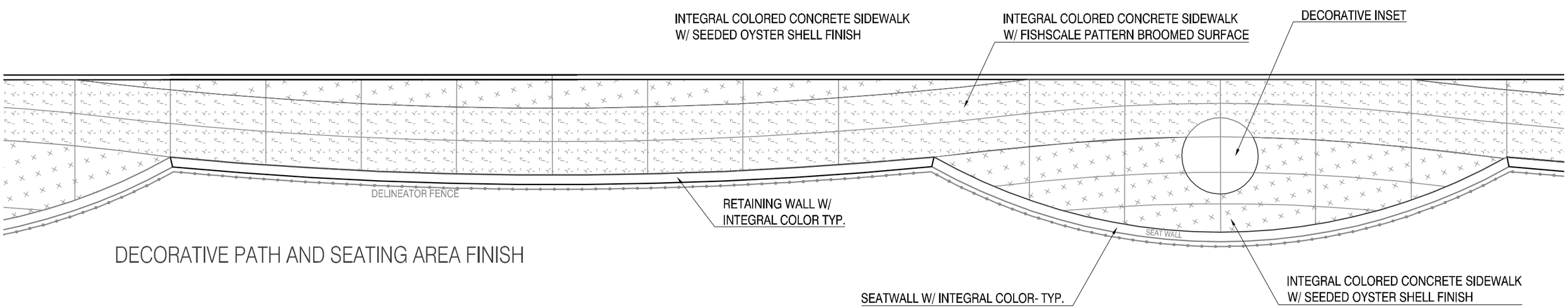

DECORATIVE PATH AND SEATING AREA FINISH

Exhibit 4: Preliminary Access Facility Designs and Pier Example

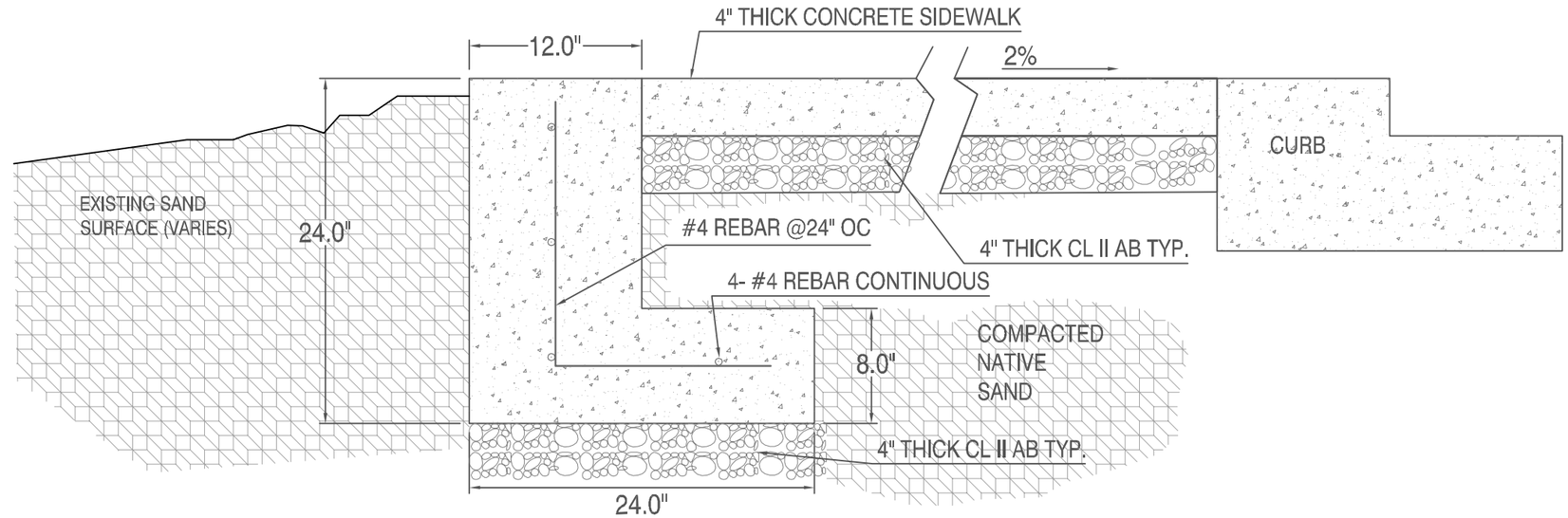

RETAINING WALL AND SIDEWALK
NTS

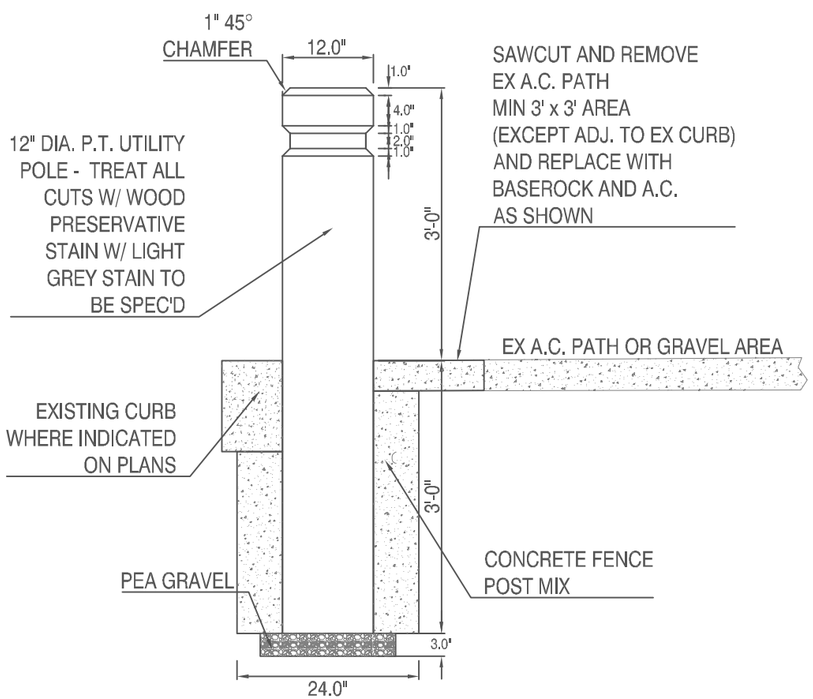

WOOD FIXED BOLLARD DETAIL
NTS

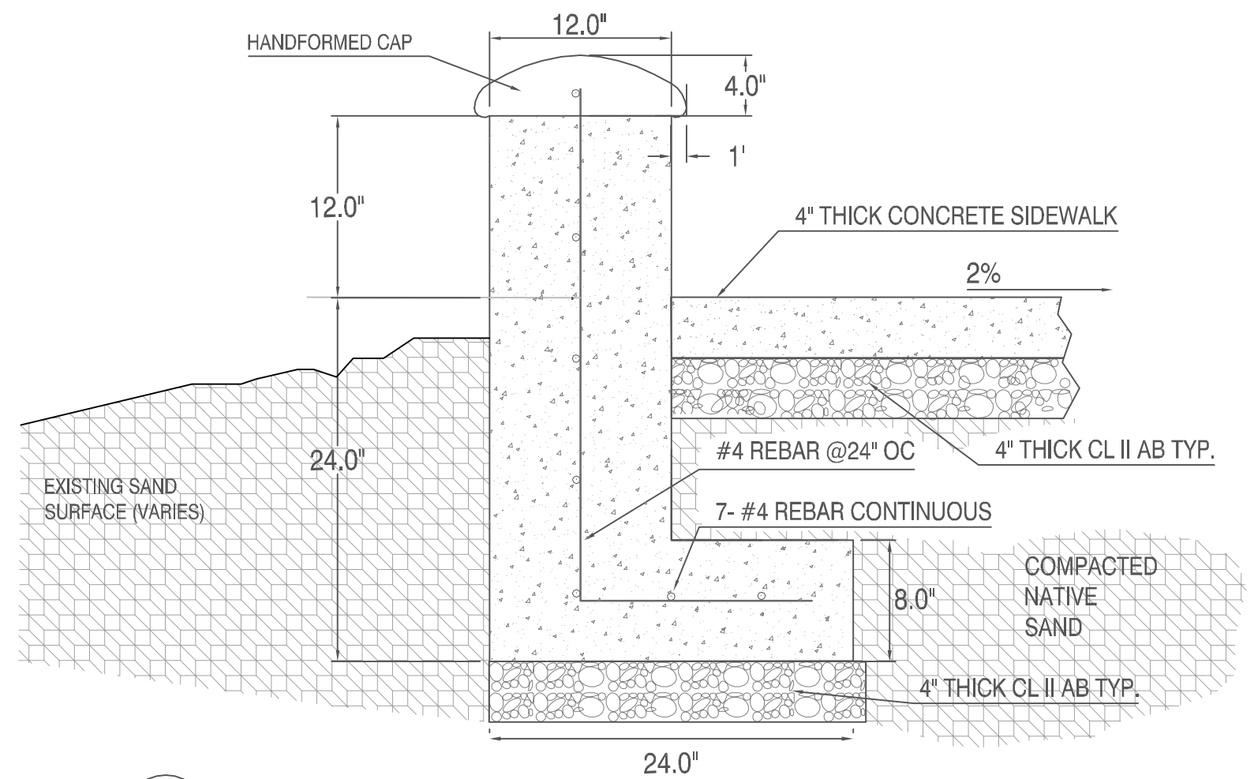

SEATWALL AND SIDEWALK SECTION
NTS

Exhibit 4: Preliminary Access Facility Designs and Pier Example

Exhibit 4: Preliminary Access Facility Designs and Pier Example